Installation Manual
Double DIN Kit
part-no.: 381190-29

• Smart Fortwo 2011->

Compatible with double DIN devices

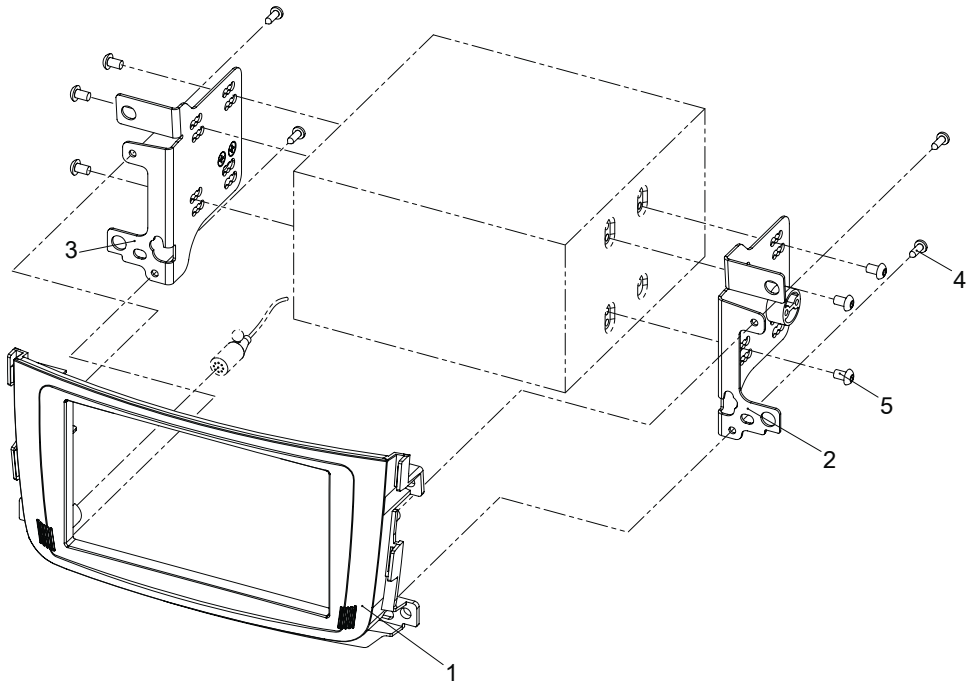

Double DIN Set contents

- (1) facia plate
- (2) mounting bracket right
- (3) mounting bracket left
- (4) self-tapping convex fillister head screw
- (5) flat headed screw



1. Smart Fortwo with OEM head unit

   Unclip hazard light switch panel (see arrows)



2. Remove screw under hazard light switch (see arrow)

   Remove panel surrounding OEM head unit



3. Remove screws of tray below OEM head unit (see arrows)

   take out tray



4. Remove screws of OEM head unit

   take out OEM head unit

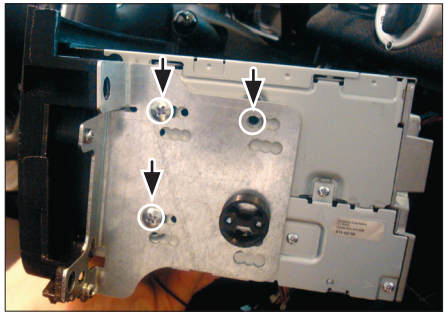

4. Fix mounting bracket left and mounting bracket right to double DIN head unit with 3 flat headed screws (see arrows) at each side

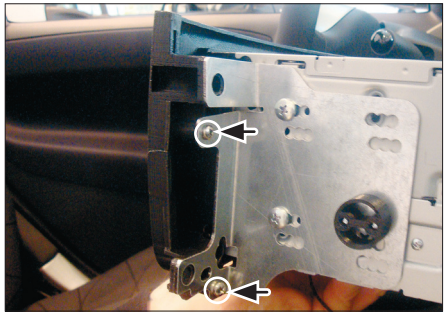

5. Push facia plate over double DIN head unit. Fix facia plate with 2 self-tapping convex fillister head screws (see arrows) at each side



6. Connect all required circuit points

   Place Double-DIN head unit on dashboard. Fix it with original screws (see arrows)



7. Install everything in reverse order to fnish installation

All installation work must be performed by a qualified professional installer only.
The manufacturer / dealer is not liable for any kind of incidential or indirect damages.